SL3 TOP & SIDE MOUNT CONTROLS

FEATURES

- Dual action (throttle and shift in one lever)
- Start in gear protection standard
- Neutral interlock prevents accidental engaging of gear (side mount only)
- Push button for neutral engine warm up
- Use 33C series type cables or OMC/Mercury OEM style cables
- Adjustable throttle damper
- Available with or without trim and/or tilt
- Neutral “warm up” button for throttle only operation

Modern styling, dual action, top and side mount controls. Black satin finish available in single or twin engine versions, with or without trim and/or tilt switches. Suits 33C, OMC and Merc cables.

ORDER INFORMATION

ORDER INFORMATION	PART No.
SL3 Top mount single lever	
Top mount single standard	309476
Top mount single deluxe with trim switch	309477
Top mount single deluxe with trim & tilt switches (Volvo)	309478-001
Top mount single deluxe with trim & tilt switches	309478-002
SL3 Top Mount Twin Lever	
Top mount twin standard	309479
Top mount twin deluxe with trim switch	309480
Top mount twin deluxe with trim & tilt switches	309481
SL3 Side mount	
Side mount standard	309473
Side mount deluxe with trim switch	309474
Side mount deluxe with trim & tilt switches (Volvo)	309475-001
Side mount deluxe with trim & tilt switches	309475-002
COMPONENTS	
Trim switch kit (no wire harness) in side hand grip	315590
Top mount tilt switch/wire harness (not trim)	309514
Layard cut-off switch (side mount)	311376

Issue Date - Jan 2014
Issue Number - mcda10

SL3 TOP & SIDE MOUNT CONTROLS

ORDER INFORMATION

ORDER INFORMATION	PART No.
COMPONENTS	
Neutral safety switch (side or top mount)	051801-033
SERVICE ITEMS	
Top mount (single) replace. parts kit	316941
Top mount (twin) replace. parts kit	316942
Side mount replacement parts kit	317002
Side mount replacement parts kit (cut-off switch)	317003
Cable nest kit (mounts all cables to controls)	212151-003

TECHNICAL DATA

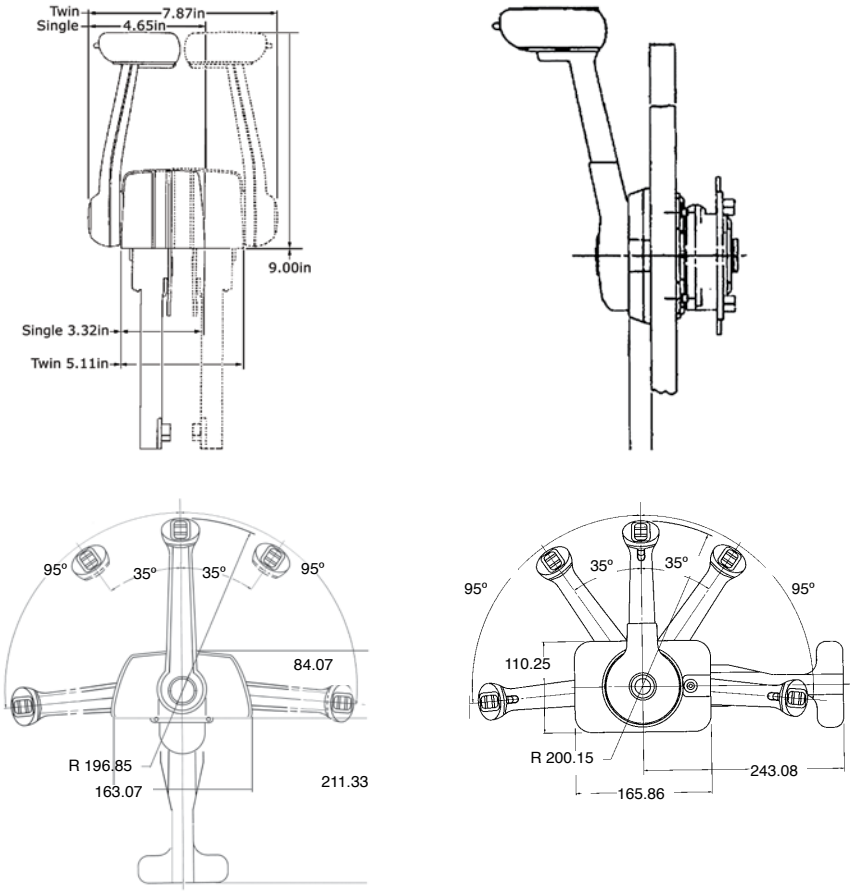

Issue Date - Jan 2014
Issue Number - mcda10