CH2800P / CH2850P CONTROLS - International Only

APPLICATIONS

Designed for steering pedestal or cockpit well mounting.

FEATURES

- Stainless Steel lever / Composite knob
- Momentary switch to control Bow Thruster or Windlass
- Suitable for power or sail
- Can be mounted with or without cover plate
- Drop in replacement for popular 700 SS control
- Standard control suits 3300/33C type cables
- Neutral “warm up” button for throttle only operation

shown without cover plate

CH2800 Features unique twistgrip switch for control of Bow thruster or windlass. Polished stainless steel lever. Dual action design. Suits 3300/33c type cables.

ORDER INFORMATION

CH2800 / 2850 CONTROLS	PART No.
Side mount control (with switch)	CH2800P
Side mount control (without Switch)	CH2850P
Optional neutral safety switch	178000

TECHNICAL DATA

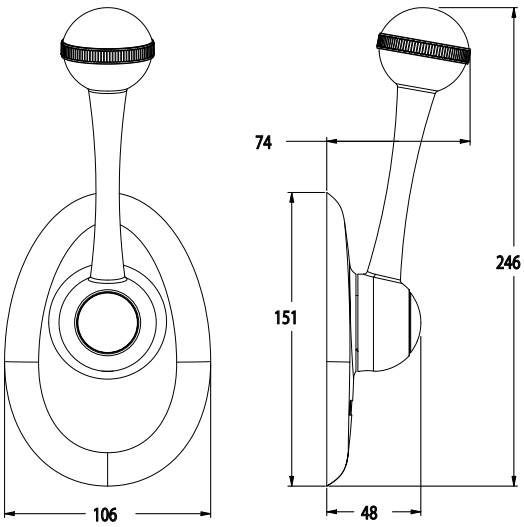

Issue Date - Nov 2013
Issue Number - mcda11int