CH2200P SKI & CH2300P JET BOAT CONTROLS

APPLICATIONS

- For ski boat and jet boat applications.

FEATURES

- Single lever, dual action for throttle and shift
- Superior neutral engine warm-up control (ski version)
- Jet version - Jet boats powered by Mercury sport Jet and OMC turbo jet
- Ski version - suits most ski boats
- Flush mount design for quick, tidy installation
- Includes hardware for two 3300/33C type cables
- Crisp shifting ball grip for a solid, sure feel
- Neutral safety switches:
  - Optional for ski version
  - Waterproof type included with jet version
- Weatherproof exterior, rugged diecast frame

These controls feature superior styling, a compact design, positive lockout with a smooth feel available, allowing for precise throttle control. Dual action design (one lever to control both shift and throttle functions). Waterproof neutral safety switch standard on jet unit (optional on ski model). Uses 3300/33C type cables.

ORDER INFORMATION

CONTROLS	PART No.
Jet boat control	CH2300P
Ski boat control	CH2200P
ACCESSORIES & PARTS	**PART No.**
Optional neutral safety switch (ski boat)	CA27090P
Neutral safety switch (jet boat)	CA27100P
Stainless steel knob (red grooved)	CA69052P
Stainless steel knob (smooth)	CA69051P

TECHNICAL DATA

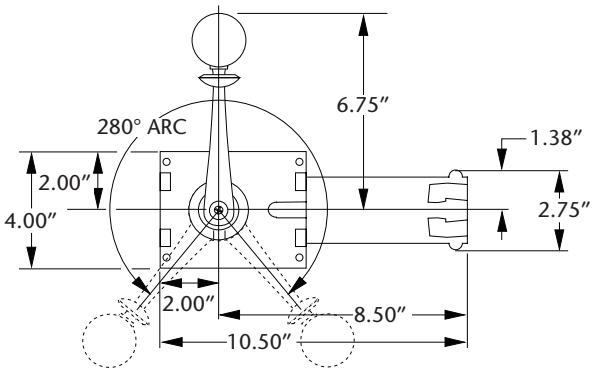

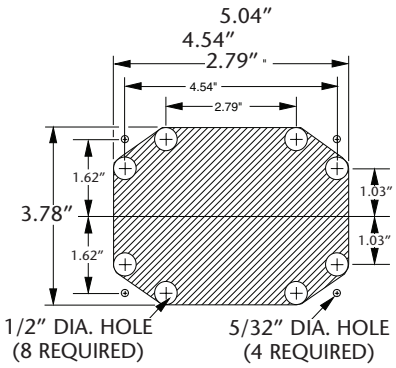

Issue Date - Oct 2013
Issue Number - mcda2