OSPREY CH7600 TOP MOUNT CONTROL (LEVER ON LEFT)

FEATURES

- Superior feel and function for most outboards, stern drives & inboards
- Dual function lever controls both throttle and shift of one engine
- Neutral safety offers start-in-gear protection (standard)
- Optional Trim in the handle for each model
- Neutral engine warm-up feature (standard)
- Optional tilt switch available
- Friction adjustment feature included
- “Easy-On” cable design accepts virtually every type of OEM and 3300/33C type cable
- Easily adapted to push or pull cable actuation mode
- Mechanical advantage 2.38:1
- Meets/exceeds all applicable standards
- Made in the U.S.A

CH7651P pictured

The ergonomics and feature of our CH7600 controls are advanced beyond those of any other control on the market. A shapely, balanced handle design provides an incredibly smooth yet positive feel, throttle warm-up and start-in-gear protection-features are standard on all CH7600 models, with neutral interlock and power trim / tilt offered as an option.

In addition the cosmetics of these controls can be configured to many tastes. CH7600 controls are suitable for use with both universal type 33C / 3300 or OEM type control cables without the need for additional adaptors.

NOTE: The handle is on the left side of the dome. For right side lever see CH7500 series.

ENGINE CONTROLS

SINGLE TOP-MOUNT CONTROL - Lever on the left	
Single Top-Mount, Chrome Handle, Chrome Cover, Chrome and Black Inserts (without trim)	CH7640P
Single Top-Mount, Chrome Handle, Chrome Cover, Chrome and Black Inserts, with Trim	CH7641P
Single Top-Mount, Chrome Handle, Chrome Cover, Chrome and Black Inserts, with Trim & Tilt	CH7642P
SINGLE TOP-MOUNT CONTROL WITH NEUTRAL INTERLOCK - Lever on the left	
Single Top-Mount, Chrome Handle, Chrome Cover, Chrome and Black Inserts, with Neutral Interlock (without trim)	CH7650P
Single Top-Mount, Chrome Handle, Chrome Cover, Chrome and Black Inserts, with Trim, with Neutral Interlock	CH7651P
Single Top-Mount, Chrome Handle, Chrome Cover, Chrome and Black Inserts, with Trim & Tilt, with Neutral Interlock	CH7652P

Issue Date - Sept 2013
Issue Number - mcda5

OSPREY CH7600 TOP MOUNT CONTROL (LEVER ON LEFT)

ENGINE CONTROLS

SERVICE ITEMS	
Dome Cover-CH7500/CH7600-Chrome	7214113
Insert Kit CH7500-with & w/o Tilt hole - Black (2 inserts)	7214518
Insert Kit CH7500-with & w/o Tilt hole - Chrome (2 inserts)	7214311
Neutral Warm-up Button Kit - CH7500/CH7600	7214715
Tilt Switch-CH7500/CH7600 - with Chrome & Black Insert Kit	7206216
Cable Nest And Connection Kit	212151-003

DIMENSIONS

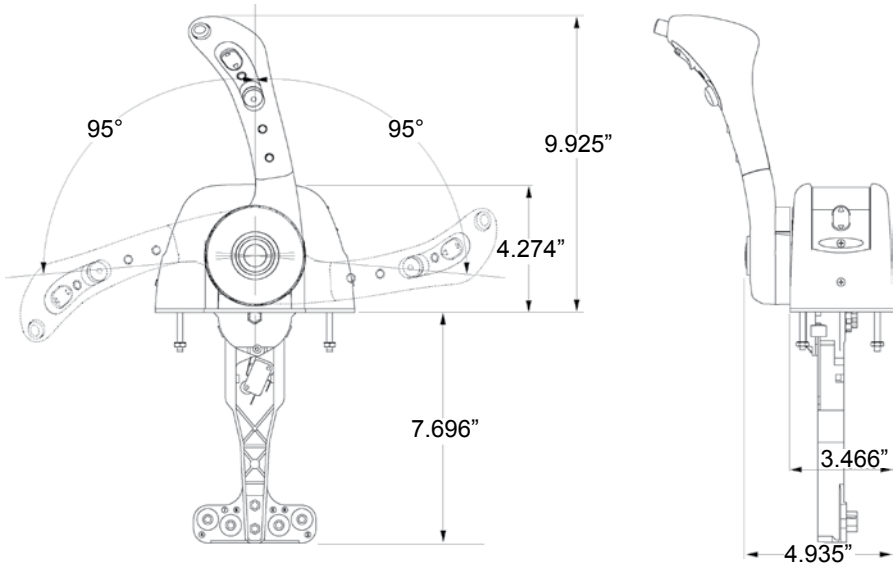

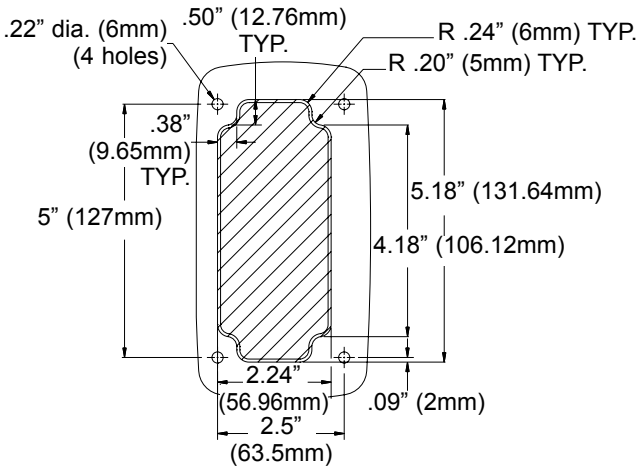

Issue Date - Sept 2013
Issue Number - mcda5