CH7800 TOP MOUNT CONTROL SERIES

FEATURES

- All controls include start in gear protection
- Designed for use with both 3300/33C universal and OEM shift and throttle cable connections
- Suitable for most boat/dual engine combinations
- Dual action levers (throttle and shift control in each handle)
- Trim, Tilt, options available
- Drag adjustment on all models
- Easy installation and set up
- Includes both chrome and black cover inserts that allow a choice of styling to ensure a perfect asthetic fit in every application
- Made in the USA

CH7800 Twin Top Mount

The ergonomics and features of our Osprey Series controls are the most advanced available and are suitable for most kinds of boat/dual engine applications. The shapely, balanced handle provides a very comfortable feel and the state of the art mechanism guarantees a smooth yet solid action, assuring you have maximum control at all times. This control is designed for twin engine applications.

CH7800 series of controls are suitable for use with both universal type 3300/33C or OEM type control cables without the need for adaptation.

ORDER INFORMATION

ENGINE CONTROLS	PART No.
Dual Top-Mount, Chrome Handles, Chrome Cover, Chrome and Black Inserts (without trim)	CH7840P
Dual Top-Mount, Chrome Handles, Chrome Cover, Chrome and Black Inserts, with Trim	CH7841P
Dual Top-Mount, Chrome Handles, Chrome Cover, Chrome and Black Inserts, with Trim & Tilt	CH7842P
SERVICE ITEMS	
Cable Nest Kit (Hardware)	212151-003
Neutral Safety Switch	051801-033

NOTE:
When properly installed, these engine controls will connect to outboard, stern drive and inboard engines, utilizing Mercury/Mariner® and OMC® OEM type control cables as well as universal 3300/33C type cables and engine connection kits.

Issue Date - Oct 2013
Issue Number - mcda6

CH7800 TOP MOUNT CONTROL SERIES

TECHNICAL DATA

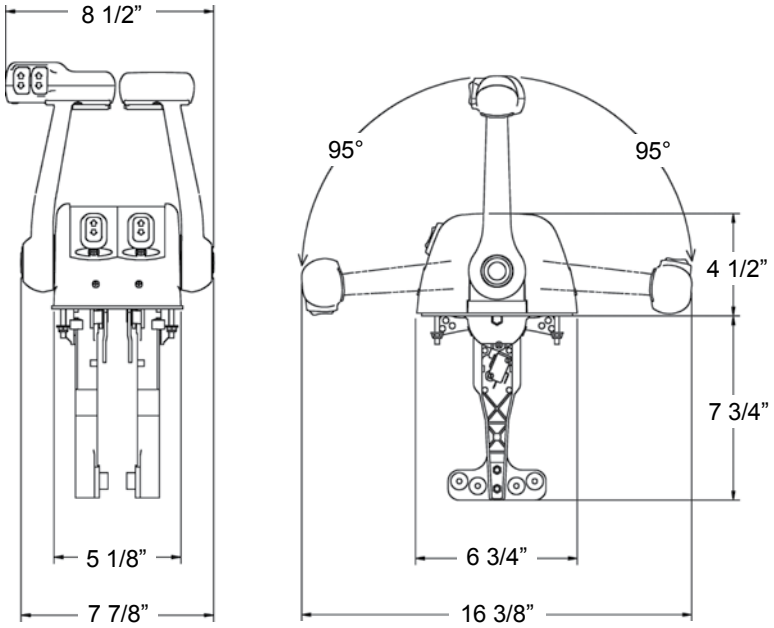

Issue Date - Oct 2013
Issue Number - mcda6