MV-3 SKI/JET BOAT CONTROL

FEATURES

- Fits all popular out-boards, inboards and stern drives
- Emergency cut-off feature available
- Ergonomically designed handgrip for maximum comfort and convenience
- Crisp, positive detents
- Built in friction drag to reduce throttle creep
- Neutral interlock feature to prevent accidental shifting
- New non-corrosive cover/ housing
- Standard control suits 33C / 3300 type cables
- Neutral safety switches available for many MV3 models
- Neutral throttle warm-up

The MV3 dual function, single lever control is the choice of competitive ski boat drivers and jet boat enthusiasts.
Suits 33C / 3300 type control cables. Models available for Berkeley Jet and Mercury 175 hp Sport Jet with 43 series cables..

ORDER INFORMATION

ENGINE CONTROLS	PART No.
MV-3 Standard For Outboard, Stern Drive Or Inboard	
MV-3 Standard Control RH Orientation, AFT Cable Entry, Neutral Safety Switch (Old No. 311364)	CH2920P
MV-3 Competition Ski Boat	
MV-3 Competition Ski Boat, RH Orientation, Forward Cable Entry (Old No. 311335)	CH2900P
MV-3 Competition Ski Boat with I/O Cut-Off Switch. (Old No. 311335-001)	CH2910P
MV-3 Right Hand Mount, Immersion Proof Switch, Warm Up Limiter (Old No. 311480).	CH2930P
MV-3 For Jet Berkeley:	
MV-3 Jet Control (Berkeley), RH Orientation, Aft Cable Entry (Old No. 311412)	CH2940P
MV-3 Jet Control (Berkeley), LH Orientation, Forward Cable Entry (Old No. 311413)	CH2945P
Mercury Sport Jet 175 (uses special 4300 cable for reverse gate):	
MV-3 HD Control (Merc 175) ion, Aft Cable Entry, Immersible Neutral Safety Switch, Throttle Limiter (Old No. 311508)	CH2950P

Issue Date - Sept 2013
Issue Number - mcda9

MV-3 SKI/JET BOAT CONTROL

ORDER INFORMATION

OPTIONS/SERVICE ITEMS	PART No.
Ball Knob, Black	4009819
Neutral Safety Switch Replacement	300928
Immersible Neutral Safety Switch for Jet	051801-031
MV-3 Emergency Cut-Off Switch Kit for Jet and Outboard	311482-002
MV-3 Emergency Cut-Off Switch Kit for I/O and Inboard	311482-001
COMPATIBLE CABLES	
OEM/Univ. 3300 Types	
Mercury 3600 type cable (premium)	CCX630
Universal 3300 Types	
XTREME 3300 cable (premium)	CCX633XX
Jet Gate Control Cables:	
Sport Jet 90 & early 120 (33 type cable w/config. at drive end for 90 & 120's)	CC213XX
Sport Jet 175 (43 type cable w/config. at drive end for 175's)	CC400XX

NOTES: Check with Engine/Drive Manufacturer for details particular to your power train.
Purchase of cable connection Kits (may be required to complete control system)
XX = length in feet

TECHNICAL DATA

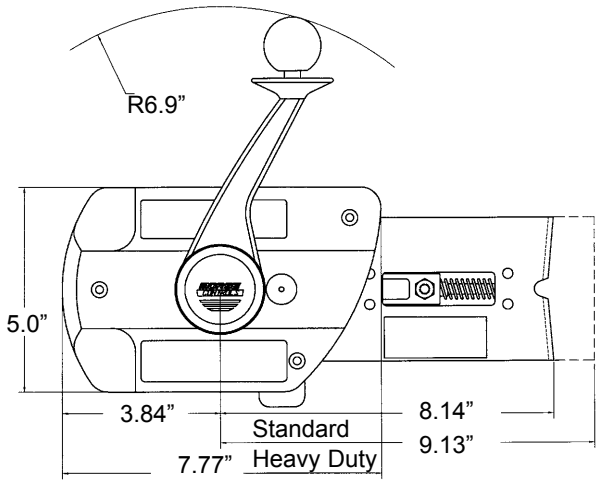

Issue Date - Sept 2013
Issue Number - mcda9