SEASTAR™

SEASTAR OUTBOARD (Front Mount)

APPLICATIONS

- General purpose system
- Single and multiple engine capability
- Total power to 700 HP *counter-rotating
- Typical applications include center console fishboats and cruisers

FEATURES

- Independent engine tilt for twin/triple engine installations
- Easy steering
- Suitable for use with all SeaStar Helms & SeaStar Power Assist
- Varying lock to lock turns ratio's, dependant on helm selection
- State of the art proprietary sealing system
- Adjustable stainless steel O-Ring seal (ORB) Fittings

New Look

- Updated styling & branding
- Robust barrel

ORB Fittings

- Adjustable stainless steel O-Ring seal (ORB) Fittings

New Sealing System

- State of the art proprietary seal material
- Similar to Tournament 2
- Excellent resistance to compression set

NEW SEASTAR CYLINDER PROFILE

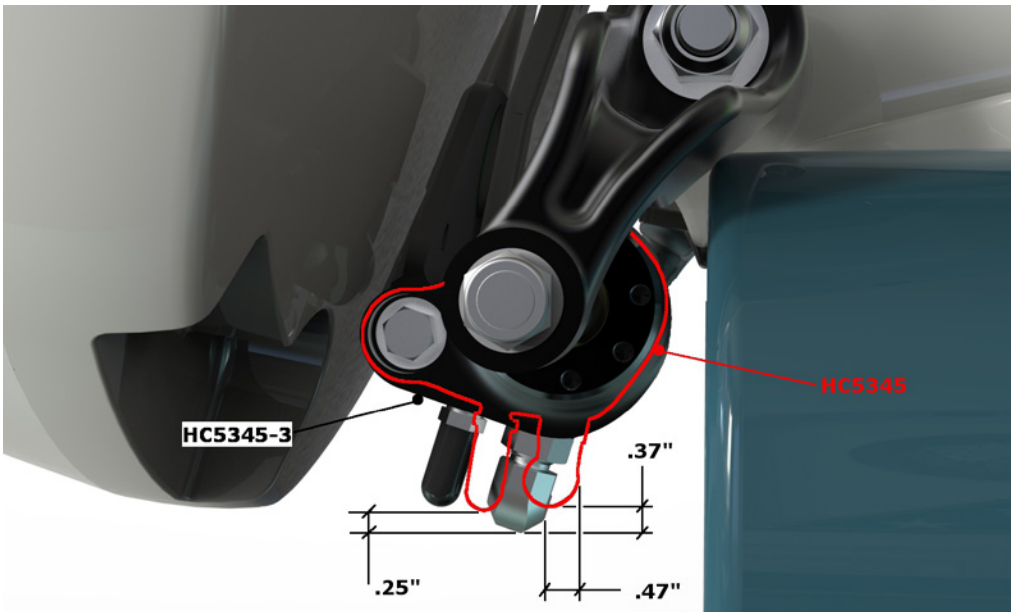

TECHNICAL DATA

PART No.	MODEL No.	SHAFT DIA. in. (mm)	STROKE in. (mm)	SEAL KIT	VOLUME cu. in. (cc)
HC5345	OUTBOARD	.75 (19.0)	8 (203)	HS5157	8.34 (136.6)

Issue Date - Nov 2013
Issue Number - hos10

SEASTAR™

SEASTAR OUTBOARD (Front Mount)

NOTES:

1. SeaStar Solutions has specific steering equipment for boats that are driven aggressively, used in severe conditions or with more than 300 HP per engine
2. ALL ENGINES over 300 HP and all boats that are driven aggressively must use a high strength tiller bolt, kit part # HA5822. All front mount cylinders built after June 15, 2007 will have this high strength bolt included in the box. High strength tiller bolts can be identified by the marking '✳' on the head of the bolt
3. HC63xx PRO Cylinders are designed for all those critical high speed, single outboard engine boats, such as Bass, Flats combo Race/Ski and other performance orientated boats capable of speeds in excess of 65 mph. For optimal performance, the use of SeaStar PRO Kevlar Steering Hoses is recom mended.

Issue Date - Nov 2013
Issue Number - hos10

FRONT MOUNT OUTBOARD INSTALLATION RECOMMENDATIONS

With the introduction of heavier, higher horsepower engines producing more torque, SeaStar Solutions has updated its recommendations across various applications (single and multiple engines, different hull types, etc.) Please read carefully to ensure that your current steering system provides the best comfort versus performance available.

ENGINE	SEASTAR FRONT MOUNT (Normal Use)	SEASTAR FRONT MOUNT (Aggressive Use – See Note 1)	HYNAUTIC K-6 (Normal Use Only)
Single Engine	Single Cylinder 350hp Max 75mph Max HC53xx Cylinder (Note 2)	Single Cylinder 350hp Max HC63xx Pro Cylinder (Note 2 & 3) or HC6845S	Single Cylinder 300hp Max 55 Mph Max
Dual Engine Non-Counter Rotating	Single Cylinder 450hp Max, 55mph Max HC53xx Cylinder HO60xx Tiebar	Single Cylinder Tournament Cylinders	Single Cylinder 400hp Max 55 Mph Max
	Dual Cylinder 600hp Max, 55mph Max HC53xx Cylinders HO60xx Tiebar	Dual Cylinder Tournament Cylinders	Dual Cylinder 500hp Max 55 Mph Max
Dual Engine Counter Rotating	Single Cylinder 600hp Max, 55 Mph Max HC53xx Cylinder, HO60xx Tiebar	Single Cylinder Tournament Cylinders	Single Cylinder 500hp Max 55 Mph Max
	Dual Cylinder 600hp Max, 55 Mph Max HC53xx Cylinders, HO60xx Tiebar	Dual Cylinder Tournament Cylinders	Dual Cylinder 500hp Max 55 Mph Max
Triple Engine One With Counter Rotating	Dual Cylinder 900hp Max, 55 Mph Max HC53xx Cylinders, HO60xx Tiebar	Dual Cylinder Tournament Cylinders	Not Recommended
	Triple Cylinder 900hp Max, 55 Mph Max HC53xx Cylinders, HO60xx Tiebar	Consult SeaStar Solutions Technical Service	