ST & STB FLUSH / SIDE MOUNT CONTROLS

FEATURES

- Durable heavy chrome finish.
- Simple rugged compact design.
- Available with or without throttle brake.
- STB complete with adjustable friction damper.
- Control suits 33C type cables or 4300 type cable.

Single function, single lever control simple trouble free design. The time proven design of these controls means years of reliable operation. Suits 33C or 43C type cable.

TECHNICAL DATA

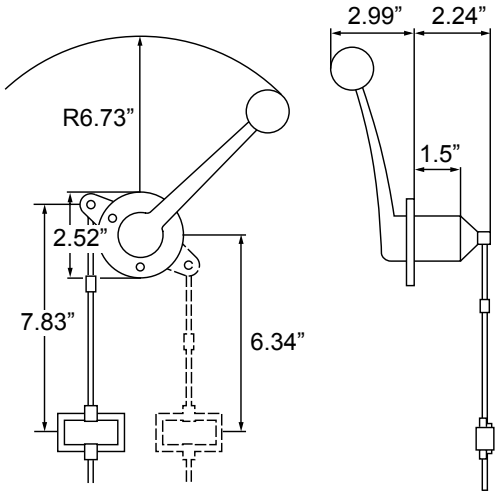

ORDER INFORMATION

CONTROLS	PART No.
ST Control w/o brake (3300/4300 cables) Old Part No’s - 031791 / 039115	CH2400P
STB w/external brake (3300/4300 cables) Old Part No’s - 044777 / 045978	CH2410P
COMPATIBLE CABLES	
Universal 3300 Types	
3300/33C cable (standard)	CC230XX
3300/33C cable (midrange)	CC332XX
XTREME 3300/33C cable (premium)	CCX633XX
Universal 43 Types	
XTREME 43BC cable	CCX430XX
XTREME 43C cable	CCX433XX
ACCESSORIES AND PARTS	
Black ball knob	4009819**
Stainless steel shift knob (smooth)	CA69051P**
Mounting hardware kit	062279

Issue Date - March 2014
Issue Number - mcsa7