SEASTAR JACKPLATE

# SEASTAR MANUAL JACKPLATES

## FEATURES

- The interlocking slide guides offer enhanced strength while providing smooth, bind-free travel.
- The lead screw assembly sets the plate height and the Side Locks are used to hold the position.
- The stainless steel lead screw is resistant to corrosion and pre-greased for smooth operation.
- The maximum supported engine weight of 585 lbs is capable of handling the most demanding outboard engines including the latest generation of 4-strokes.

The JP1000 Series Jackplate comes in 4”, 6”, 8”, and 10” setbacks to help you find the best match for your boat and optimize performance.

3” of available lift

## ORDER INFORMATION

| MANUAL JACKPLATES | PART No. |
|---|---|
| 4” Setback with Side Locks | JP1040SS |
| 6” Setback with Side Locks | JP1060SS |
| 8” Setback with Side Locks | JP1080SS |
| 10” Setback with Side Locks | JP1100SS |

## TECHNICAL DATA

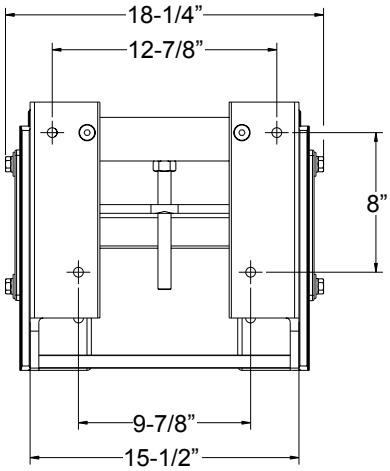


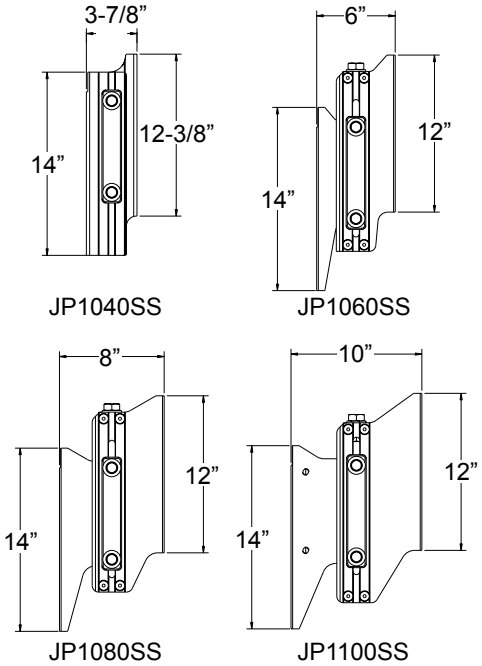


Issue Date - Jan 2015
Issue Number - jp3

SEASTAR SOLUTIONS®

Learn More

www.seastarsolutions.com

GENUINE SEASTAR SOLUTIONS A WORLD LEADER IN MARINE PRODUCTS