SeaStar Solutions
Instruction Sheet

DUAL STEERING FOR SUZUKI V6 O/B
KIT PART NUMBER 305711

SEASTAR SOLUTIONS
640 North Lewis Road
Limerick, PA 19468 USA
610-495-7011
www.seastarsolutions.com

PLEASE COMPLETELY READ AND UNDERSTAND THIS INSTALLATION SHEET PRIOR TO INSTALLATION TO AVOID DAMAGE TO THE OUTBOARD MOTOR, BOAT OR ACCESSORY.

NOTE: BOTH GEAR RACKS OR ROTARY STEERING HEADS MUST BE INSTALLED SO THAT BOTH STEERING CABLES WILL BE ROUTED TOGETHER ON THE SAME SIDE OF THE BOAT AND WILL PUSH-PULL TOGETHER. SEE FIGURE 1.

STEERING CABLE MOUNTING BRACKET INSTALLATION

A. Install mounting bracket to the engine with the four 6 x 15mm bolts. Do not tighten at this time. See Figure 2.
B. Install steering cable support tube into mounting bracket using the two adjustment nuts and locking tab washers. Do not tighten at this time. See Figure 3.

STEERING CABLE INSTALLATION

A. Lubricate inside of engine tilt tube and inside of steering cable support tube.
B. Insert ends of steering cables through engine tilt tube and cable support tube. Thread steering cable attaching nuts onto both tubes and hand tighten.
C. Install steering cable bushing and seal to cable support tube as follows:
- Slip bushing and seal over output end of rod. See Figure 4.
- Slide bushing inside support tube until it's flush with the end of the tube.
- Push seal securely on to end of cable support tube. See Figure 5.

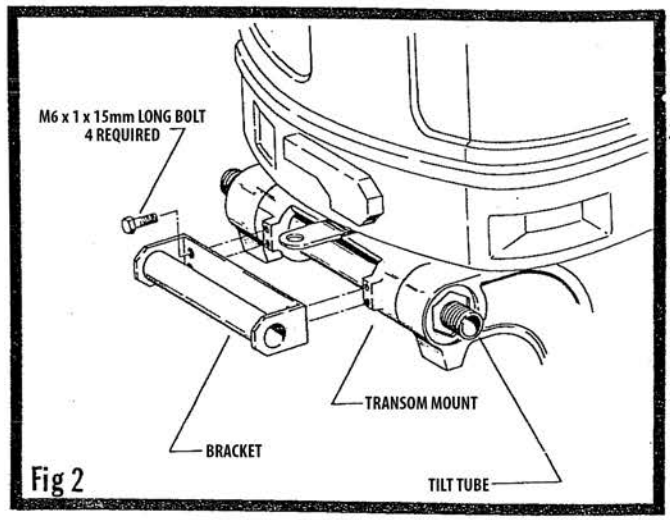

Fig 2

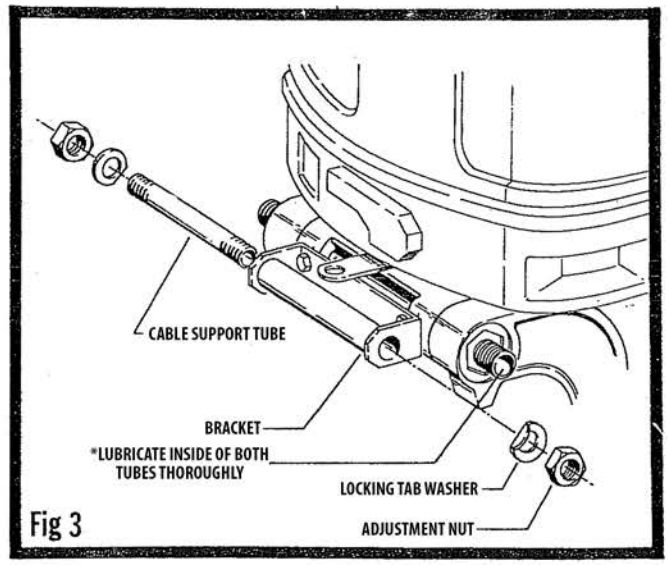

Fig 3

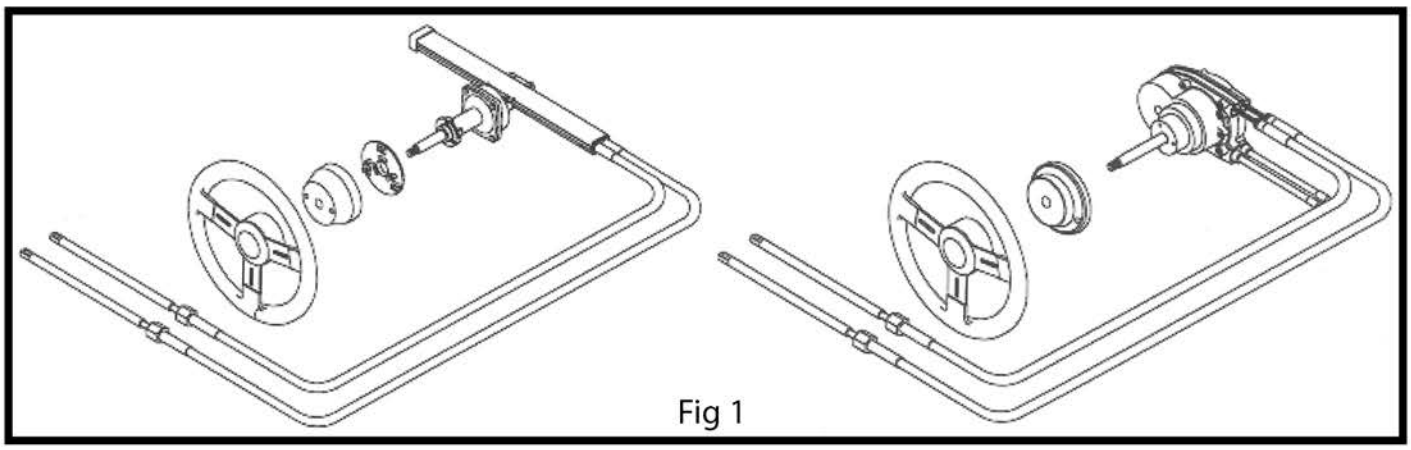
Fig 1

©1985 Marine Acquisition (US) Inc.

055001-489, Rev 1, 05/2013

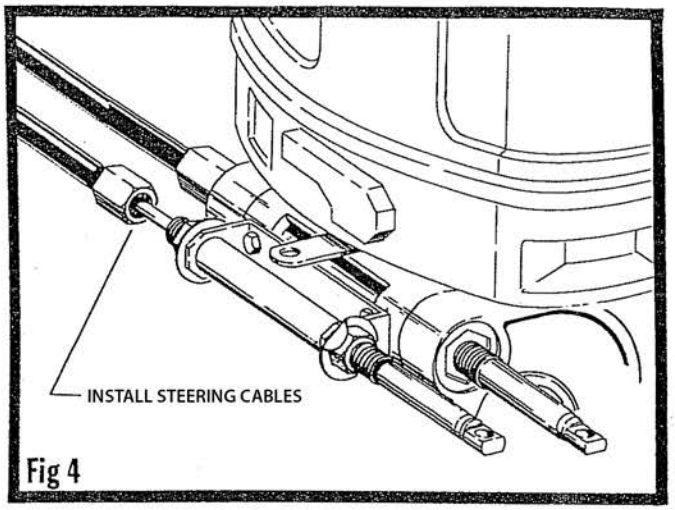

Fig 4

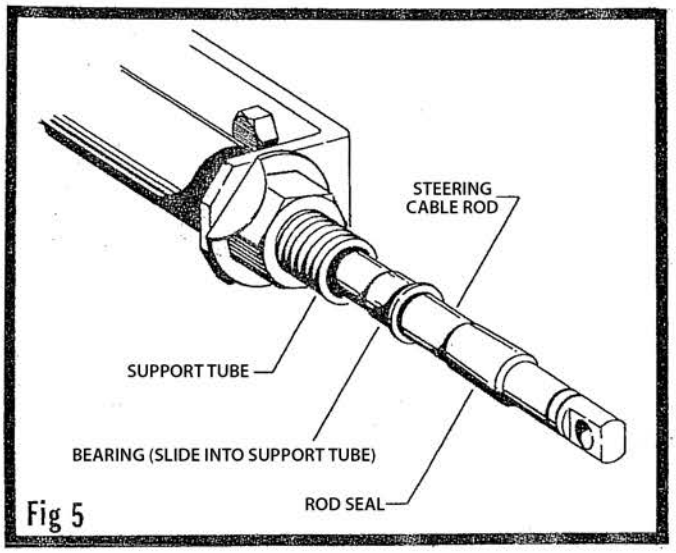

Fig 5

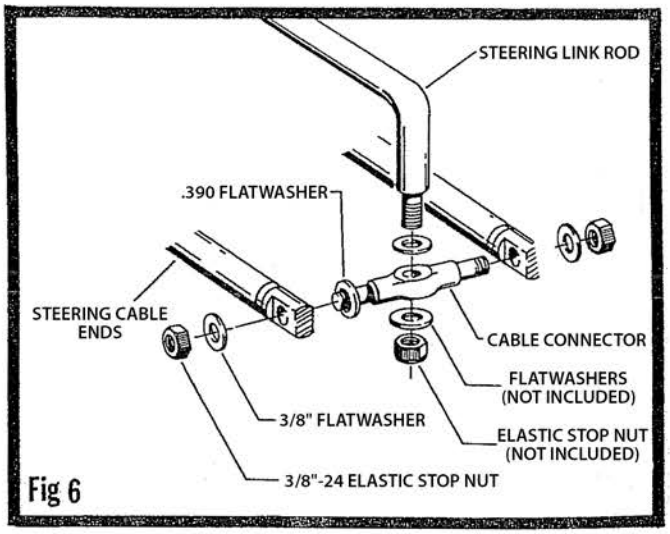

Fig 6

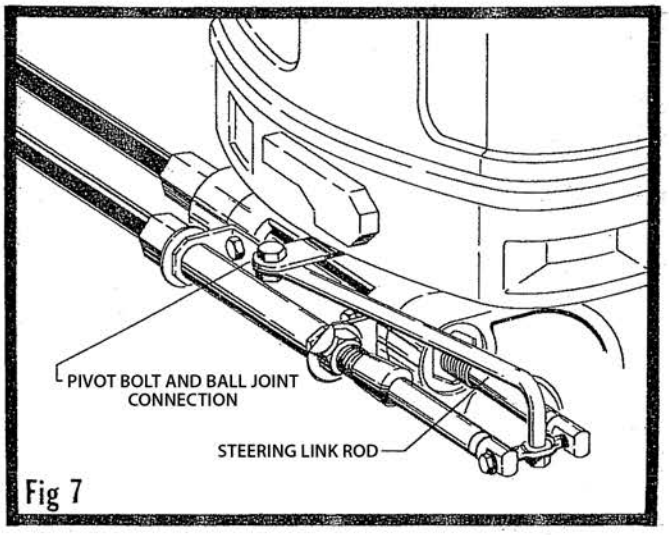

Fig 7

CABLE CONNECTOR INSTALLATION

A. Install cable connector on to the ends of the steering cables and secure with 3/8" flat washers and self-locking nuts. Tighten nuts to 20 ft./lbs. of torque. See Figure 6.

B. Tighten mounting bracket bolts to 100 in./lbs. of torque. See Figure 6.

STEERING LINK ROD INSTALLATION

A. Lubricate steering link rod mounting hole in cable connector. Install steering link rod to cable connector using a flat washer on each side of the connector and a self-locking nut. (these items not included) Tighten nut until it seats (do not exceed 120 in./lbs.) then back nut off 1/4 turn.

B. Lubricate steering link rod pivot bolt and ball joint with a rust preventive. Install steering link rod to bottom side of engine steering arm using pivot bolt and tighten to 20 ft./lbs. Thread locknut on pivot bolt and tighten to 20 ft./lbs. See Figure 7.

NOTE: PROPER TENSION OF THE STEERING CABLES MUST BE ACHIEVED BEFORE THE DUAL CABLE STEERING SYSTEM CAN OPERATE CORRECTLY. NOT ENOUGH TENSION WILL RESULT IN EXCESS SLACK (PLAY) IN THE STEERING SYSTEM. TOO MUCH TENSION WILL CAUSE THE STEERING CABLES TO BIND.

STEERING TENSION ADJUSTMENT

A. Loosen adjustment nuts and pull steering cable support tube away from the end of the cable. Tighten the adjustment nuts and check for proper tension. If too tight, adjust tube toward the cable end. If too loose, adjust away from the cable end. Tighten adjustment nuts and recheck system tension. Readjust if necessary.

B. Torque adjustment nuts to 35 ft./lbs. and bend locking tab washers over bracket.

C. Secure each steering cable coupler nut fully onto the support tube. The coupler nut has a locking ring in the threads. Make sure the nut is drawn up fully and its internal plastic locking ring is engaged. If you do not tighten this nut fully there will be excessive play in the steering system.