SEASTAR SOLUTIONS PRODUCTS
INSTRUCTION SHEET

KIT PART NUMBER 042577

SINGLE OR DUAL STATION CLUTCH KIT FOR TWIN DISC MODELS MG508, MG509, MG510, MG510A, MG514C, MG514CHP, MG518, MG521, MG527, MG530 AND MG540.

FOR USE WITH 3300/33C CABLES

The cable enters from any of 12 positions at 30 degree increments

NOTICE:

THE ABOVE MENTIONED MODELS COME WITH EITHER FIGURE 1 OR FIGURE 2 VALVE COVERS. SUPPLIED IN THIS KIT ARE 4 EACH ALUMINUM SPACERS AND 4 EACH HEX HEAD CAP SCREWS 5/16-18 X 1.25 INCHES LONG.

ON THE MODELS WITH THE VALVE COVER AS SHOWN IN FIGURE 1, THESE SPACERS MUST BE BETWEEN THE MOUNTING BRACKET AND THE VALVE COVER. ALSO, THE SCREWS MUST BE REPLACED WITH LONGER ONES.

ON MODELS WITH THE VALVE COVER AS SHOWN IN FIGURE 2, THE MOUNTING BRACKET MOUNTS TO THE VALVE COVER WITHOUT THE USE OF THE SPACERS. ALSO, THE EXISTING SCREWS MUST BE USED.

1. After choosing a cable path, secure the Mounting Bracket to the Valve Cover in the desired position.

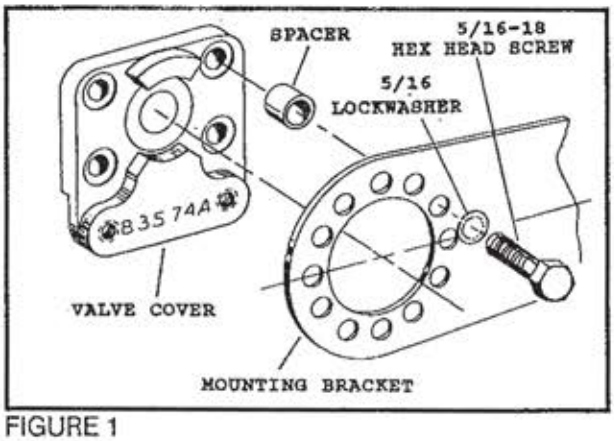

FIGURE 1

2. Attach the Adapter to the Mounting Bracket using the INNER set of holes. Secure with the Screws, Lockwashers and Nuts.

3. Fasten the Cable Hubs to the Adapter using the Clamps, Screws, Lockwashers and Nuts provided. Make sure that the Clamp engages the cable Hub Groove properly.

4. Place the transmission selector lever in the NEUTRAL position. Remove the transmission lever and reposition it so that it is approximately at a right angle (90 degrees) to the cable path when the transmission is in neutral. Re-tighten the Selector Lever.

5. Attach the Pivot Pin to the transmission Selector Lever and secure with the lockwasher and nut.

6. Place the Control Head Hand Levers in the NEUTRAL position.

7. Thread the Cable Terminals onto the Cable Rod Ends until they line up with the Pivot Pin on the transmission Selector Lever. The Rod End threads should engage the Terminal approximately 1/2 inch. Reposition the lever on the shaft, if necessary, to obtain the engagement.

8. Hold each Terminal to prevent it from turning and tighten the Cable Jam Nut against the terminal.

9. Secure the Terminals to the Pivot Pin with the E-Ring provided.

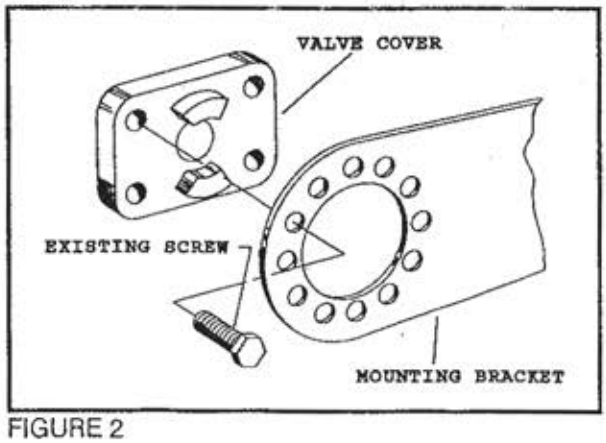

FIGURE 2

© 1989 Marine Acquisition (US) Inc.

055000-427, Rev 0, 06/2013

WARNING:

DO NOT BOTTOM THE TRANSMISSION SHIFT LEVER AGAINST THE POSITIVE STOPS IN THE TRANSMISSION. THE LIMIT OF THE SHIFT LEVER TRAVEL MUST BE DETERMINED ONLY BY THE CONTROL CABLE. WHEN USING THIS KIT WITH MODEL CH5400P TWIN SR CONTROL, ADJUST THE STOP SCREWS IN THE CONTROL HEAD TO PREVENT JAMMING OF THE TRANSMISSION SHIFT LEVER AGAINST THE STOPS AT "FORWARD" AND "REVERSE" POSITIONS.

10. Refer to the Control Head instructions for final check and adjustment procedures.

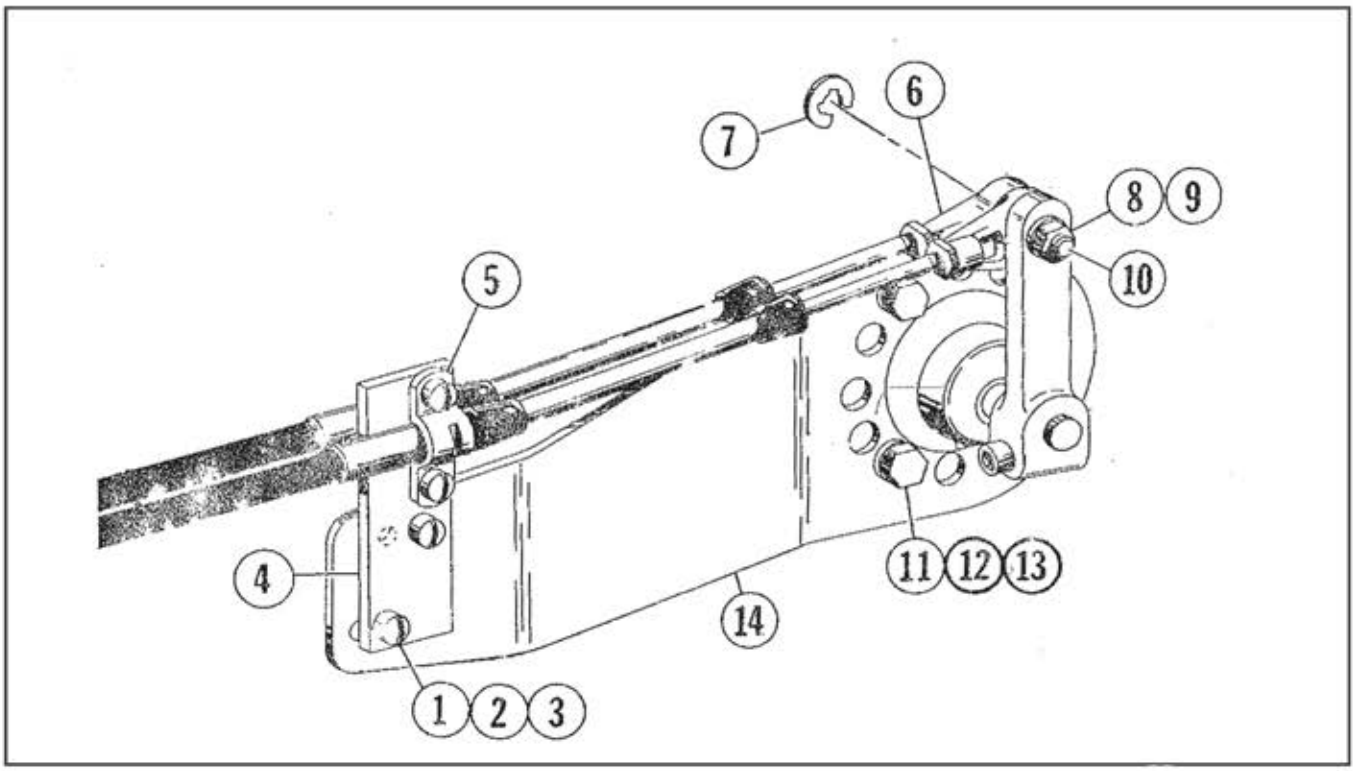

BILL OF MATERIALS

ITEM NO.	DESCRIPTION	NO. REQ'D.
1	SCREW #10-32 x .62 LONG	4
2	LOCKWASHER #10	4
3	HEX NUT #10-32	4
4	ADAPTER	1
5	CLAMP	2
6	TERMINALS	2
7	E-RING 5/16	1
8	LOCKWASHER 1/4	1
9	PIVOT PIN	1
10	HEX NUT 1/4-28	1
11	HEX HEAD SCREW 5/16-18 x 1.25 LONG	4
12	LOCKWASHER 5/16	4
13	SPACER	4
14	MOUNTING BRACKET	1

SEASTAR SOLUTIONS®

640 North Lewis Road
Limerick, PA 19468 USA
610-495-7011
www.seastarsolutions.com