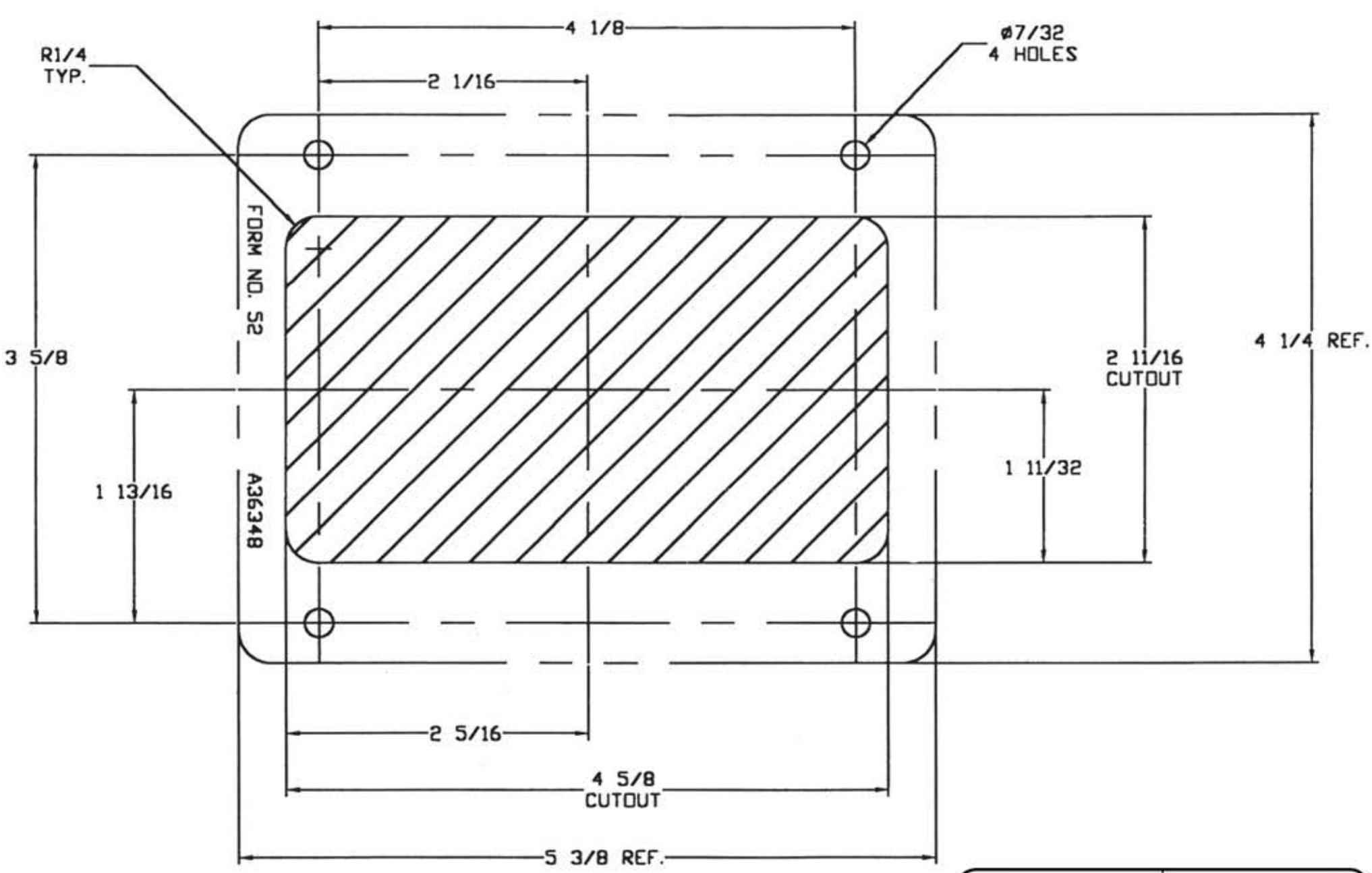

USA Sales/Support
SeaStar Solutions
640 North Lewis Road
Limerick, PA 19468
610-495-7011
www.seastarsolutions.com

Overseas Sales/Support
SeaStar Solutions
International Sales and
Marketing
Tel: +44 1202 828010
www.seastarsolutions.com

© 1973 Marine Acquisition (US) Inc.

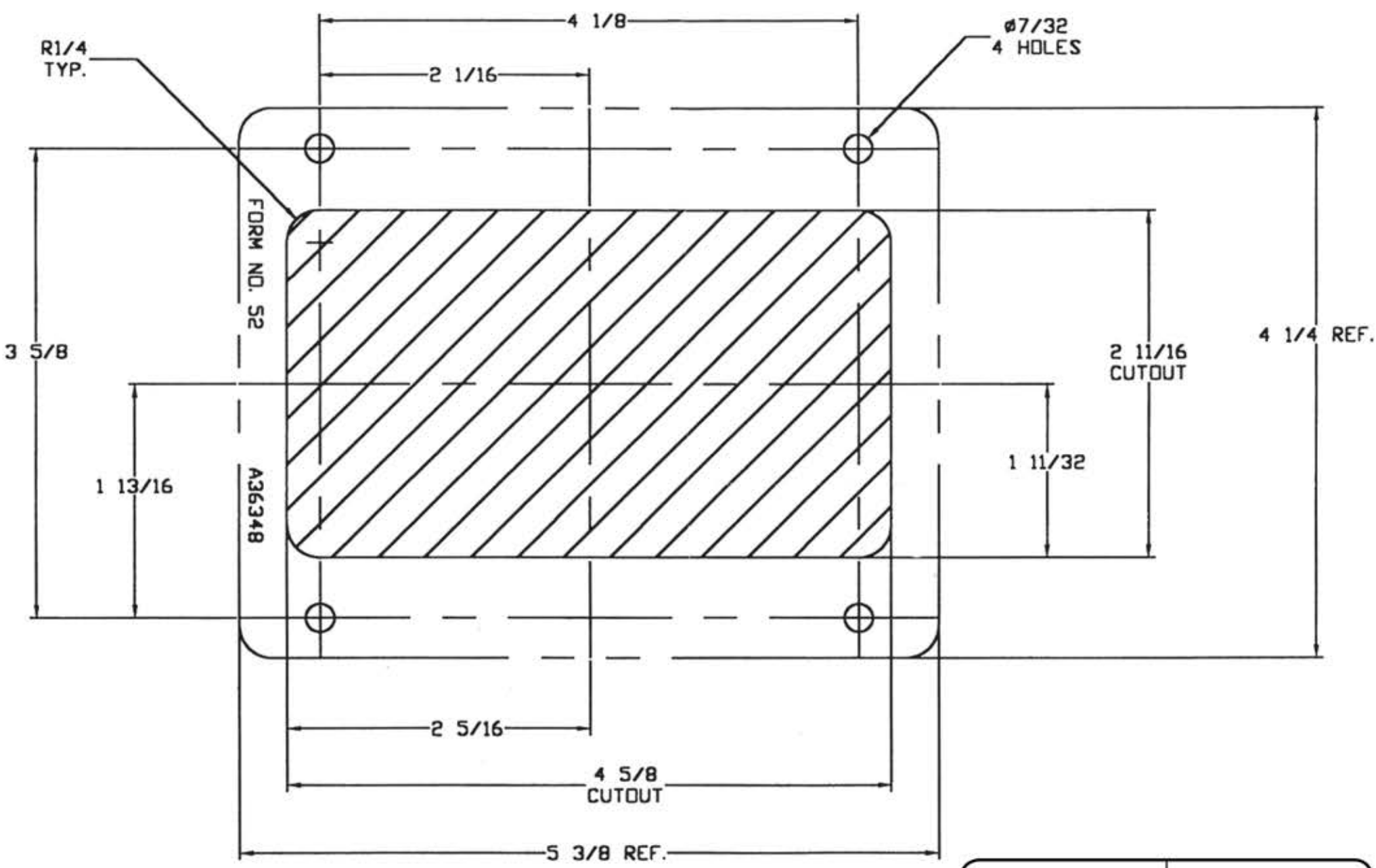

USA Sales/Support
SeaStar Solutions
640 North Lewis Road
Limerick, PA 19468
610-495-7011
www.seastarsolutions.com

Overseas Sales/Support
SeaStar Solutions
International Sales and
Marketing
Tel: +44 1202 828010
www.seastarsolutions.com

©1973 Marine Acquisition (US) Inc.

036348, Rev 0, 05/2013