XTREME SERIES - DUAL TOP MOUNT CONTROL

APPLICATIONS

Dual-function control - each lever controls throttle and shift. For nearly any engine

FEATURES

- All controls include start in gear protection
- Designed for use with both 3300/33C universal and OEM shift and throttle cable connections
- Suitable for most boat/dual engine combinations
- Can be used in dual station, dual engine applications with the DS unit
- Dual action levers (throttle and shift control in each handle)
- Trim & Tilt options available
- Drag adjustment on all models
- Easy installation and set up
- Designed and assembled in the USA
- New master trim button in handle to trim both engines with separate trim switches in the base of the control for individual trimming

CHX8241P Pictured

Xtreme Twin Top Mount Series

The ergonomics and features of our Xtreme Series controls are the most advanced available and are suitable for most kinds of dual engine application boats. The shapely, balanced handles provide a very comfortable feel and the state of the art mechanism guarantees a smooth yet solid action, assuring you have maximum control at all times. This control is designed for twin engine applications.

Xtreme series of controls are suitable for use with both 3300/33C universal or OEM type control cables without the need for adaptation at the control.

ORDER INFORMATION

OPTION - CHROME	PART No.
Xtreme Dual Top Mount Control, Chrome	CHX8240P
Xtreme Dual Top Mount Control, Chrome trim switch	CHX8241P
Xtreme Dual Top Mount Control, Chrome with trim switch, tilt switch	CHX8242P

NOTE:
When properly installed, these engine controls will connect to outboard, stern drive and inboard engines, utilizing Mercury/Mariner® and OMC® OEM type control cables as well as 3300/33C universal type cables and engine connection kits.

Issue Date - Sept 2017
Issue Number - mcda-6 aftermarket

XTREME SERIES - DUAL TOP MOUNT CONTROL

TECHNICAL DATA

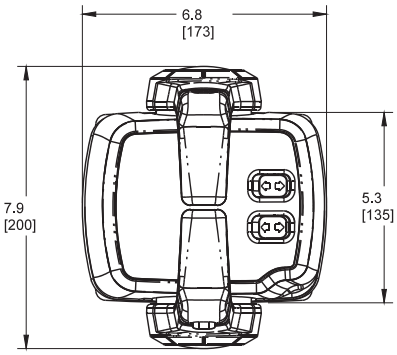

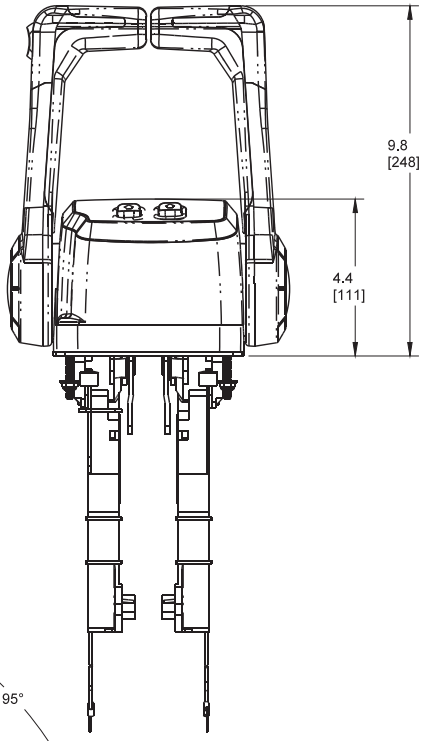

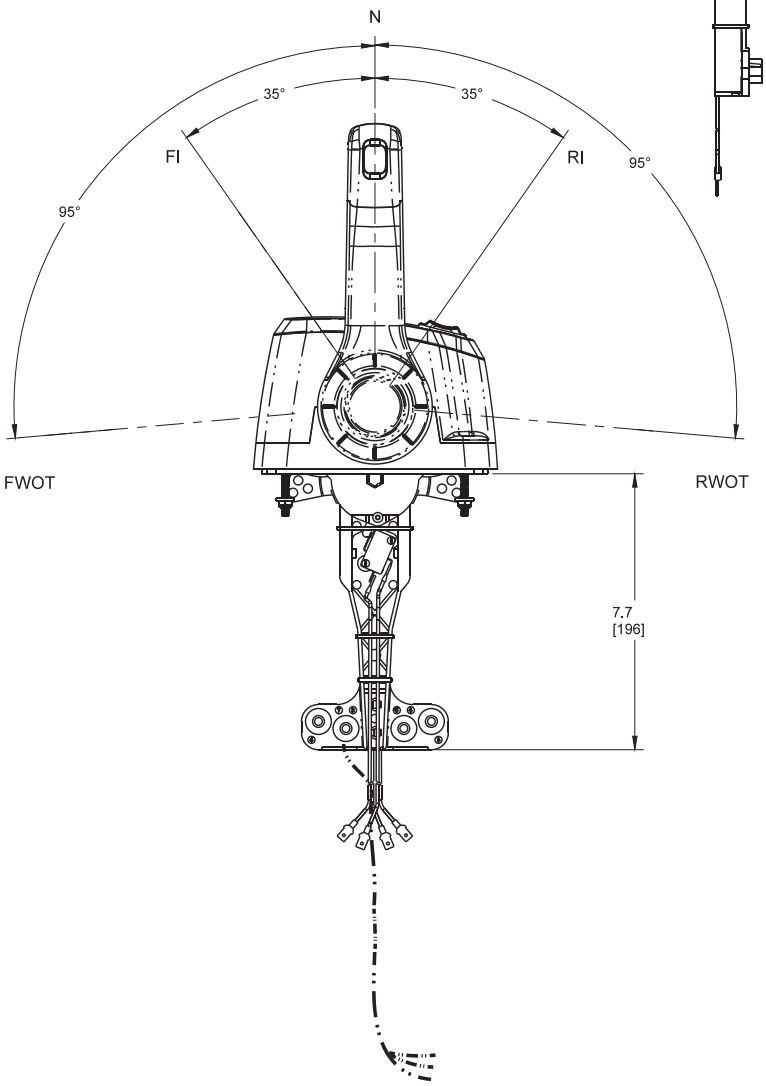

Issue Date - July 2017

Issue Number - mcda-6 aftermarket